Mansion Weave Parquet 004



Images are a guide; natural wood varies. Please order a sample.

OVERVIEW

Species	European oak
Colour & surface	European Oak, gently structured, special reactive stains, eco oil, eco hard-wax oil
Collection	Mansion Weave Parquet Flooring

SPECIFICATIONS

Species	European Oak
Finish	Eco friendly Oil and Hardwax Oil
Construction	Engineered Oak
Thickness	16mm or 21mm
Width	240mm hexagonal block / 90mm weave strip
Length	367mm hexagonal block (135° corners) / 350mm weave strip (45° cut ends)
Pattern	hexagonal blocks interlaced with diagonal weave strips – see the dimension drawing
Structure	Engineered, 16mm (4mm top layer) or 21mm (6mm top layer)
Edges	4 sides micro bevels or 4 side square edges
Jointing system	Tongue and Groove
Grade	Rustic, Classic, Select
Surface	Finish Dependant
Finish/Colour	can be made to any colour you can find on our website
Colour variation	(grade and finish dependent)
Underfloor Heating Suitable	Yes

- Bespoke mansion weave sizes are available upon request.

PATTERN & DIMENSIONS

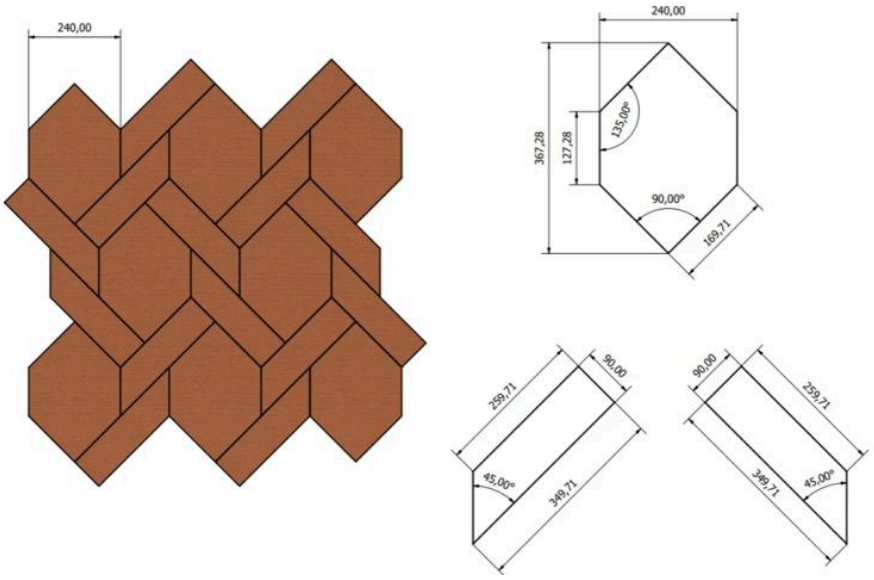

Dimensions in mm. Hexagonal block 240 × 367 mm with 135° corners; weave strips 90 mm wide and 350 mm long (260 mm on the short edge) with 45° cut ends. Thickness 16 mm (4 mm top layer) or 21 mm (6 mm top layer). Bespoke mansion weave sizes are available upon request.

GRADES

Rustic	The most characterful grade: no restriction on colour variation, sound knots in any number, sapwood allowed; larger knots and natural cracks are filled with colour-matched filler.
Classic	A natural, balanced look: moderate colour variation, sound knots of moderate size and number, some sapwood; filled where needed.
Select	A calm, more uniform appearance: limited colour variation, mostly free from knots with only small, isolated sound knots (filled with matching filler).

Natural wood varies from board to board and batch to batch. Grade photos and samples are a guide; see www.hoffparquet.co.uk/wood-flooring-grades.html.

DESIGN OPTIONS FOR PARQUET

- Brass inlay – a fine 3 mm or 5 mm brushed solid brass line to frame the parquet field, separate rooms or create panels (Brass Inlay 15 × 3 mm and 14 × 5 mm, 3 m lengths).
- Wide plank border – a perimeter border of bespoke wide oak planks around the herringbone or chevron field, mitred at the corners.
- Contrasting wood inlay – a single or double border, band or feature in a different colour or species, such as walnut in oak or a darker stain.
- Bespoke sizes – block widths, lengths and angles made to order to suit the room and the design.

STAIR SOLUTIONS

Matching stair nosings, treads and risers are made in the same wood and finish as this floor.



Square edge nosing

A crisp, modern nose that finishes flush with the riser. Edges are lightly bevelled so the line stays sharp but comfortable underfoot.



Square nosing, softened edge

The same flush square nose with a small rounded edge, softer to the touch and more resistant to knocks on busy stairs.



Full bullnose

A traditional fully rounded nose that overhangs the riser – the classic choice for Victorian and Georgian staircases.



Overhang nosing, rounded corners

An overhanging nose with a flat face and gently rounded corners – a lighter, contemporary take on the bullnose.



Bespoke treads and risers

Solid or engineered treads, risers, landings and stringers made to measure in any of our woods, grades and finishes.

FLOOR PROFILES & THRESHOLDS

Solid oak profiles made to the exact height of your floor, unfinished or stained to match (colours 001–040).



Ramp profile

Slopes gently from the wood floor down to a lower floor such as vinyl, tile or a door threshold, so there is no trip edge.



Flat threshold

A slim flat bar that covers the joint between two floors of the same height – ideal for doorways between rooms.



T-bar threshold

A T-shaped profile whose stem sits in the expansion gap between two floors of equal height, allowing both floors to move freely.



Wood to carpet profile

Finishes the edge where wood flooring meets carpet, with a lip that holds the carpet neatly in place.



L-shape end profile

An L-shaped edge that wraps the end of the floor where it meets a step, a glass door or a lower level.

INSTALLATION

Before fitting	Acclimatise the boards in the room for at least 72 hours. The subfloor must be clean, dry and level; moisture-test screeds before installation.
Method	Fully bonded to the subfloor with a suitable flooring adhesive.
Underfloor heating	Suitable when fully bonded. Floor surface temperature must not exceed 27°C.
Guides	Step-by-step installation guides: www.hoffparquet.co.uk/wood-flooring-installation-guides.html

CARE & MAINTENANCE

Daily	Sweep or vacuum with a soft floor-brush attachment (no rotating brush). Use felt pads under furniture and mats at entrances.
Cleaning	Damp mop (well wrung) with a pH-neutral cleaner for oiled and hard-wax oiled floors, such as Hoff Parquet "Floor Care" Wood Floor Cleaner. No steam mops or vinegar.
Maintenance	Refresh with a maintenance oil or "Floor Care" Wax Refresher every 8–12 months at home, more often in busy commercial areas.
Full guide	www.hoffparquet.co.uk/cleaning-and-maintenance-instructions.html

SAMPLES & ORDERING

Samples	10 × 10 cm £2.00 + VAT · 20 × 40 cm £25.00 + VAT. Sample cost is deducted from your full order. Order online: www.hoffparquet.co.uk/store/p583/Mansion_Weave_Parquet_004.html
Quotation	Supply only or supply and installation across Edinburgh, Glasgow, London and the UK. Free quotations and site visits in Edinburgh and the surrounding areas.
Trade	Architects, interior designers and developers: ask about our trade programme and complimentary samples.
Certification	Timber from FSC® and PEFC™ certified sources, compliant with UK and EU Timber Regulations.